AXIS™

TESTED PRODUCTS
EFFICIENT SERVICE
TRUSTED BRAND

An ISO 9001: 2015 Company

Product Catalog

Aerial Bundled Conductor Solutions

AXIS ELECTRICAL COMPONENTS (I) P. LTD.

Our Vision

To be a leading global enterprise providing innovative & value based solutions in the Electrical & Energy Sector.

Our Mission

AXIS is committed to deliver excellence and superior value to our customers, shareholders, employees and society at large.
Our mission is driven through the 4 pillars of:

1. **Customer Centricity:** To become the "Supplier of Choice", delivering products and services and creating value for our customers.

2. **People Centricity:** To be the "Employer of Choice", nurturing and developing talent, fostering teamwork & capability with a high sense of pace, passion and pride driven by value & culture.

3. **Community Centricity:** To be recognized as a responsible corporate citizen through facilities, being legally compliant and driven by a strong corporate governance.

4. **Business & Technology Centricity:** To drive innovative, efficient & effective systems, processes and delivery backbone backed by technology for a sustainable and scalable business growth and value.

AXIS™

TESTED PRODUCTS
EFFICIENT SERVICE
TRUSTED BRAND

An ISO 9001: 2015 Company

Company Profile

Leading Manufacturer & Exporter

Axis is the leading Indian Manufacturer & Exporter of a wide range of Electrical Components used in Electrical Installations and in the Equipment Building industry. Our main customer base consist of Distributors/Wholesalers of Electrical Products, Electrical Contractors & Installers, Equipment Manufacturers, Maintenance Companies and Government Authorities.

Exports to more than 80 Countries Worldwide

Over the years, Axis has supplied high quality and tested products to thousands of customers in over 80 countries. As a result, the Axis brand has become synonymous with Quality.

International Certifications

Axis invests heavily in continuous improvements in its products and manufacturing processes. This allows Axis to always be ahead of the curve through certifications and approvals from around the world. Products manufactured by Axis follow widely accepted international such as BS, DIN, UL, NFC, AS/NZ & Indian Standard (IS). CRISIL India, an S&P subsidiary, rated Axis as having the highest performance capabilities and strong financial strength.

Constant Improvement

Axis's dual focus on foreseeing customer requirements and looking at the future of the industry, translates to a continuous desire to evolve and upgrade our product offerings.

Quality Management

Our goal is to provide each customer with products, systems and services that meet the highest standards of quality. To assure quality management, Axis has achieved an ISO 9001 Certification.

AXIS™
An ISO 9001: 2015 Company

Anchoring Brackets & Clamps

Service Clamps

Suspension Clamps

Distribution Boxes

Insulation Piercing Connectors (IPC)

Other Accessories

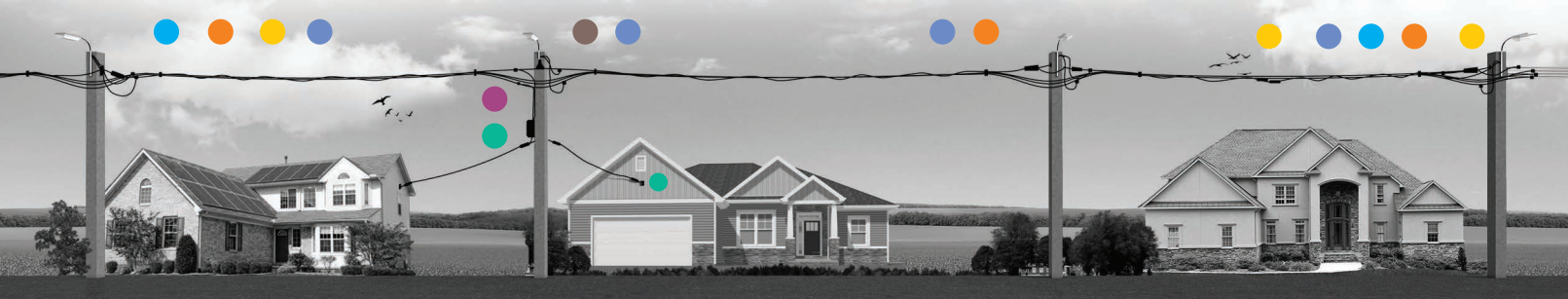

The above drawing is for illustration purpose only, actuals may vary

Index

INTRODUCTION 03

Cable Construction ---- 04

INSULATED MESSENGER SYSTEM 05

Anchoring Clamps ---- 06
Suspension Clamps ---- 08
Service Clamps ---- 10

SELF-SUPPORTING SYSTEM (2 CORE OR 4 CORE SYSTEM) 11

Anchoring Clamps ---- 12
Suspension Clamps ---- 14
Service Clamps ---- 16

UNINSULATED MESSENGER SYSTEM 17

Anchoring Clamps (Customised NFC Design) ---- 18
Tension Clamps (REC Design) ---- 20
Suspension Clamps (Customised NFC Design) ---- 22
Suspension Clamps ---- 24
High Tension Suspension Clamps ---- 24

CONNECTING SYSTEM 25

Application Guide ---- 26
Insulation Piercing Connectors IPC ---- 28
Pre-Insulated Midspan Joints ---- 29
Pre-insulated Bimetallic Lugs ---- 30

DISTRIBUTION BOXES 31

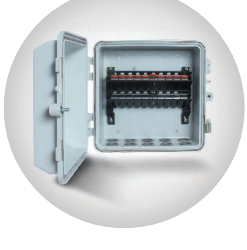

Distribution Boxes (PC) ---- 32
Distribution Boxes (SMC) ---- 33
Distribution Boxes (Deep Drawn) ---- 34

SUPPORTING HARDWARE 35

OTHER HARDWARE & TOOLS 36

AXIS™
An ISO 9001: 2015 Company

Introduction to Aerial Bundled Cable (ABC)

Reliability,

Safety &

Flexibility

Aerial Bundled Cable (ABC) is an innovative concept for Over Head (OH) power distribution. When compared to the conventional bare conductor OH distribution system, ABC provides higher safety and reliability, lower power losses, stability in voltage regulation and ultimate system economy by reducing installation, maintenance and operation cost.

Easy & Safe Installation in Difficult Terrain: This system is ideal for rural & difficult terrain such as hilly areas, dense forest, coastal regions etc. These lines can be laid without cutting or trimming any trees. ABC is also convenient to lay in densely populated areas with narrow gaps between buildings, where it is usually not possible to run bare conductors. Accidental electrocutions are avoided by the insulation of the cable. The insulated system allows live line working and thus less downtime, a safe working environment and quick installation.

Cost Effectiveness: Underground cable installations have a capital cost ratio as high as 20:1 when compared to OH lines, thus giving the ABC system a distinct advantage in cost effectiveness. Also, since the cables are clearly visible, the faults can be detected and rectified quickly and with ease. Damage due to water logging is also avoided as compared to underground cables.

Reliability: ABC's are highly reliable and the insulation has been developed to withstand heat, cold and intense sunlight. Disturbance and faults occur five to ten times more on open wire lines than on ABC lines. There is no risk in working on a live cable and the insulation reduces the number of short circuits, over-voltages and transformer burn outs caused by thunder-storms. Fewer hardware accessories are needed as each one can be used with many different sizes of cable.

Reduced Distribution Losses: According to World Bank analysis, India loses 20% of its generated electricity due to T&D loses of which power theft is a major component. Compared to the bare line system, the insulation of the ABC system makes it far more secure and thus saves it from Power Theft.

AXIS™
An ISO 9001: 2015 Company

Cable Construction

Insulated Messenger System

An insulated messenger system (also called the French system) consists of 3 black, weather resistant XLPE or PE insulated phase conductors twisted along with an insulated messenger conductor made of a high strength Aluminum alloy which serves as a dual purpose earthing and/or neutral messenger wire.

These systems may also carry 1 or 2 service lines of insulated Aluminum conductor with cross section of 16mm^2 or 25mm^2 to be used for street lighting.

The phase and service conductors are of the same strength while the neutral conductor is made of a high strength Aluminum Alloy as it is strained to take the load of the entire cable system.

The construction and mechanical properties of this system originate from HD 626 Part 6 Section E.

Self-Supporting System (2 Core or 4 Core System)

The self supporting cable system consists of 2 or 4 PE or XLPE black, weather resistant insulated conductors. The mechanical strength of all the cables are equal such that, when strained, all the cables will equally bear the load of the system.

These systems may also carry 1 or 2 service lines of insulated Aluminum conductor with cross section of 16mm^2 or 25mm^2 to be used for street lighting.

The construction and mechanical properties of this system originate from HD 626 Part 4 Section F.

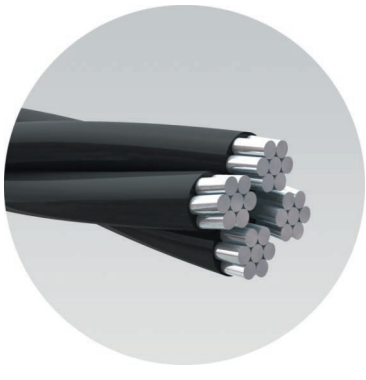

Uninsulated Messenger System

A uninsulated messenger system (also called the Finnish system) consists of 1-4 black, weather resistant PE insulated phase conductors twisted around a messenger conductor made of a high strength Aluminum alloy.

These systems may also carry 1 or 2 service lines of insulated Aluminum conductor with cross section of 16mm^2 or 25mm^2 to be used for street lighting.

The phase and service conductors are of the same strength while the neutral conductor is made of a high strength Aluminum Alloy as it is strained to take the load of the entire cable system.

The construction and mechanical properties of this system originate from HD 626 Part 5 Section D.

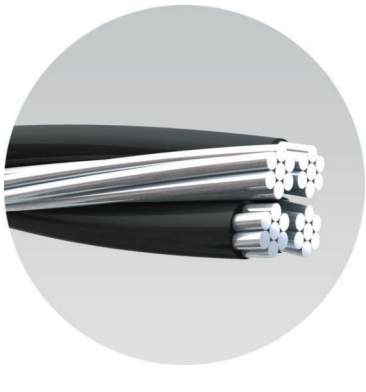

Standard Use / Application

To terminate in to
transformer leads or
mains for industrial / residential supply.

To provide angle up to 90° to the line.

Application Angle:

Maximum line deviation angle of 45° for single and 90° for double anchoring:

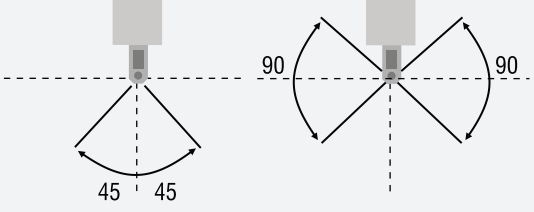

Anchoring Clamps

Axis Anchoring Clamps for Insulated Neutral Messenger System (ACI) are used along with a bracket or other supporting hardware (as a customized option), and are used to strain the insulated neutral messenger and also to provide angles of a LV-ABC system without damaging the cable's insulation.

The clamp and bracket are available separately or factory-assembled.

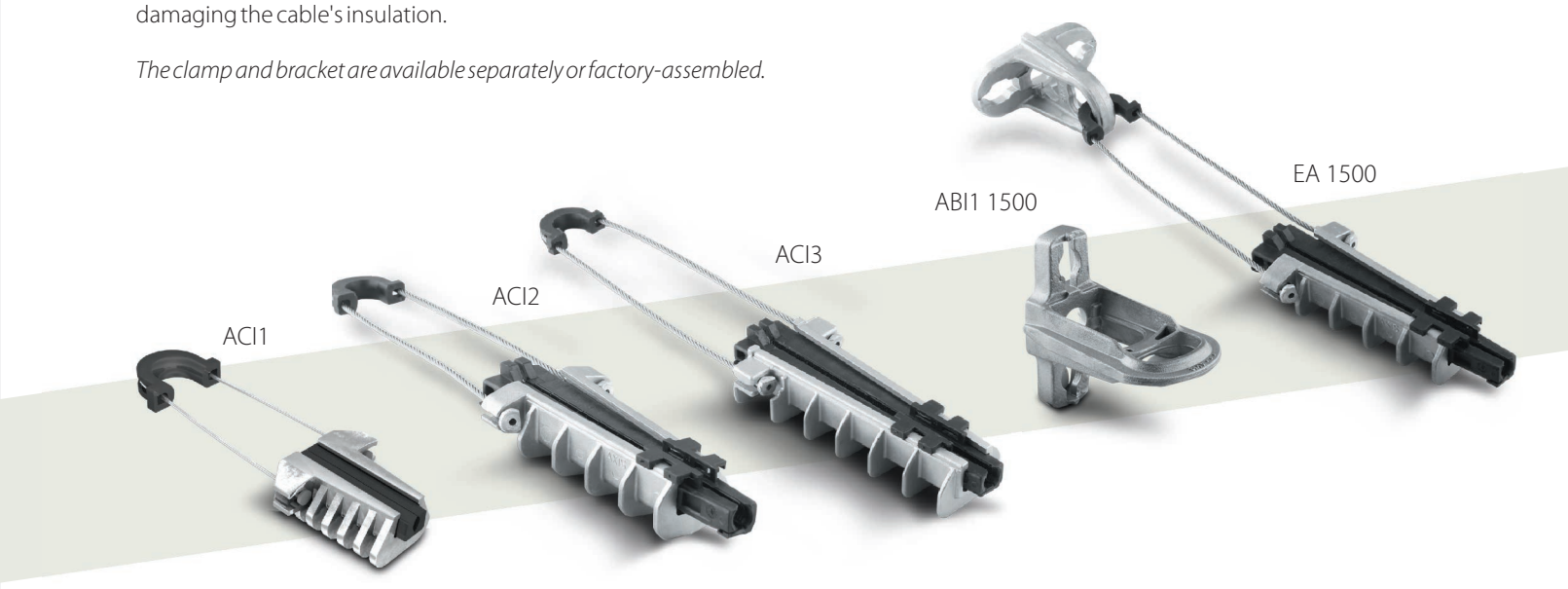

Materials:

- Body : High strength cast aluminum alloy.
- Wedges : UV and weather resistant engineering-plastic.
- Bail : Corrosion resistant flexible stainless steel wire

Features & Benefits:

- Exceeds requirements of NF C 33-041 and other international standards.
- Engineering plastics provide additional insulation, strength and enable live line working and without additional tools.
- Withstands extreme conditions leading to long life, safety, low maintenance and reduced lifetime cost.
- Captive Design Clamp with a bracket used for straining, reduces installation time and cost.
- Two clamps with a bracket used for large angle assembly which allows for easy turning in congested areas.

Product Code	Product Range	Conductor Dia (ref.)	Breaking Load (KN)	Pkg Qty
ACI1 2535	25-35 mm^2	8.6 - 10.9 mm	5	60
ACI2 2535	25-35 mm^2	8.6 - 10.9 mm	15	30
ACI2 1500 *	54.6-70 mm^2	12.3 – 13.6 mm	15	30
ACI3 5095	54.6-70(95) mm^2	12.3 – 13.6 (15.0) mm	20	30

Bracket Features:

- Heat treated high strength corrosion resistant aluminum alloy.
- Mounting by M14 or M16 bolts or by using 20x0.7mm SS Straps.

Product Code	Swivel Angle	Breaking Load	Pkg Qty
ABI1 1500	45° for single anchoring 90° for double anchoring	15 kN	60

** Standard product in accordance with NFC 33-041*

can be ordered as EA 1500 = ACI2 1500 + ABI 1 1500

Note: Bolts, Straps and Ties to be ordered separately

Standard Use / Application

To support and suspend the line

To provide service connection by tapping main line.

Application Angle:

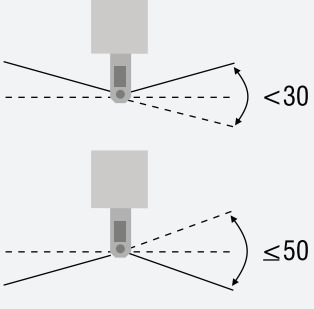

Suspension Clamps

Axis Suspension Clamps for Insulated Neutral Messenger System (SCI) are used along with a bracket or other supporting hardware to suspend and grip, without damaging, the insulated neutral messenger of a LV-ABC system by means of an adjustable lock that accommodates a range of cable sizes.

The clamp and bracket are available factory-assembled or separetely.

Materials:

- Body, Movable Link & Lock : UV and weather resistant, high strength engineering-plastic.

Features & Benefits:

- Exceeds requirements of NF C 33-040 and other international standards.
- Withstands extreme conditions leading to long life, safety, low maintenance and reduced lifetime cost.
- The Engineering plastics used provide additional insulation, strength and enable live line working without additional tools.

The design facilitates longitudinal and transversal movements allowing easy turning in congested areas.

Product Code	Product Range	Conductor Dia (ref.)	Breaking Load (KN)	Pkg Qty
SCI1 2535	25-35mm²	8.6 - 10.9 mm	5	90
SCI2 2535	25-35mm²	8.6 - 10.9 mm	12	30
SCI2 1500	54.6-70mm²	12.3 – 13.6 mm	12	30
SCI3 7095	up to 95mm²	12.3 – 13.6 (15.0) mm	12	30
SCI4 2595	25-95mm²	8.6 - 15.0 mm	12	40

Bracket Features:

- Heat treated high strength corrosion resistant aluminum alloy.
- Mounting by M14 or M16 bolts or by using 20 x 0.7mm SS Straps.
- The integrated metal stopper prevents the suspension clamp from turning over.

Product Code	Swivel Angle	Breaking Load	Pkg Qty
SBI1 1500	45°	13.1 KN	60

** Standard product in accordance with NFC 33-040 can be ordered as ES 1500 = SCI2 1500 + SBI 1 1500*

Note: Bolts, Straps and Ties to be ordered separately

Standard Use / Application

To provide angles to service lines.

To support tap-off service line.

To anchor serviceline on the wall.

Service Clamps

Axis Service Clamps for Insulated Neutral Messenger System (SAM) is used along with a bracket or other supporting hardware, and is used to strain the insulated service conductor of a LV-ABC system without damaging the cable's insulation.

The main application of Axis Service Clamps are to bring service connections to households or street lighting.

The clamps can be used for anchoring 1, 2 or 4 service cables.

Materials:

- Body and Wedges: UV resistant, high strength engineering-plastic.
- Bail: Stainless Steel.

Features & Benefits:

- Exceeds requirements of NF C 33-042 and other international standards.
- Withstands extreme conditions leading to long life, safety, low maintenance and reduced lifetime cost.
- Engineering plastics provide additional insulation, strength and enable live line working without additional tools.
- Two clamps with a bracket used for large angle assembly which allows for easy turning in congested areas.
- Captive Design Clamp with a bracket used for straining, reduces installation time and cost.

Product Code	Product Range	Conductor Dia (ref.)	Breaking Load (KN)	Pkg Qty
SAM1 1C 1625	1C x 16-25 mm^2	7.0 - 9.4 mm	2KN	60
SAM2 2C/4C 1625	2/4C x 16-25 mm^2	7.0 - 9.4 mm	2KN	60
SAM3 2C/4C 1625	2/4C x 16-25 mm^2	7.0 - 9.4 mm	2KN	60
SAM4 2C/4C 425	2/4C x 16-25 mm^2	12- upto 22 mm	2KN	60

Bracket Features:

- Heat strength corrosion resistant aluminum alloy.
- Mounting by M14 or M16 bolts or by using 20x0.7mm SS Straps.
- Upto 6 Service Clamps can be mounted.

Product Code	Swivel Angle	Breaking Load	Pkg Qty
SBM1	"45° for single anchoring 90° for double anchoring"	10 kN	60

Note: More options for suppor ting hardware is available in section SH on page no. 33

Standard Use / Application

To terminate in to transformer leads or mains for industrial / residential supply.

To continue the line on Pole.

Anchoring Clamps

Axis Anchoring Clamps for Self-Supporting System (ACS) are used to anchor two or four core insulated bundled cables, all of which have equal cross sectional areas. The clamp is tightened by bolting and is designed in a manner to avoid damage to the cable insulation.

The product can be used along with various types of hook bolts.

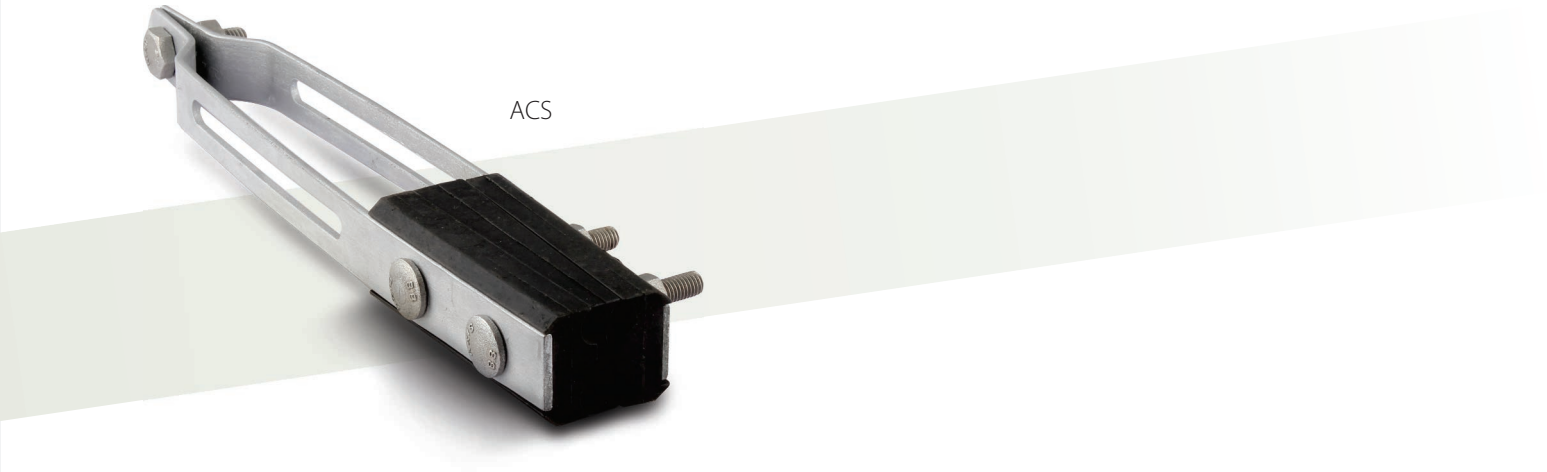

ACS

Materials:

- Clamping Plates: Galvanized steel
- Wedges: UV and weather resistant, high strength engineering-plastic
- Bolts: Galvanized steel

Features & Benefits:

- Sustains the load of the cable size accommodated, ref. BSEN 50483.
- Takes a range of cable sizes and has no losable parts, simplifying inventory management.
- Spring mounting allows for separation of the wedges and easy insertion of the cables.
- Withstands extreme conditions leading to long life, safety, low maintenance and reduced lifetime cost.

Product Code	Product Range	Conductor Dia (ref.)	Load (KN)	Pkg Qty
ACS 2550	25-50mm^2	9.5 – 12.5 mm	20KN	38
ACS 5095	50-95mm^2	12.5 - 16.0 mm	36KN	20
ACS 95120	95-120mm^2	16.0 – 16.7 mm	36KN	20

Standard Use / Application

To support and suspend the line

To provide deviation angles to the line upto 60° using Yoke Plate

Suspension Clamps

Axis Suspeniton Clamps for Self-Supporting System (SCS) are designed to suspend and grip the insulated bundle of a LV-ABC system by means of tightening through a bolt and wingnut assembly without the use of any additional tool.

The product can be used along with various types of hook bolts.

Materials:

- Body : Hot dip galvanized steel
- Insert : UV and weather resistant elastomer
- Bolts : Galvanized steel

Features & Benefits:

- Sustains the load of the cable size accommodated, ref. BSEN 50483.
- Takes a range of cable sizes and has no losable parts, simplifying inventory management.
- Can be used for straight line laying or up to deviation angles up to 30° which allows for easy turning in congested areas.
- Deviation angles up to 60° can be achieved using the yoke plate and two suspension clamps which allows for easy turning in congested areas.
- Withstands extreme conditions leading to long life, safety, low maintenance and reduced lifetime cost.

Product Code	Conductor size	Conductor Dia	Load (KN)	Pkg Qty
SCS1 2550	25-50mm^2	21 - 28 mm	7 KN	60
SCS1 7095	70- 95mm^2	32 - 37 mm	7 KN	60
SCS1 95120	95-120mm^2	37 – 42 mm	7 KN	60
SCS2 25120	2/4C x 25-120 mm^2	21 – 42 mm	7 KN	60

Note: More options for supporting hardware is available in section SH on page no. 33

Self-Supporting System (2 Core or 4 Core System)

Standard Use / Application

To provide service connection
by tapping main line.

Service Clamps

Axis Service Clamps for Self-Supporting System (SAS) consist of clamp plates and wedges mounted with a bolt. This product is used along with a variety of hook bolts and is mainly used to strain the insulated service conductor of a LV-ABC system without damaging the cable's insulation.

The main application of Axis Service Clamps is to bring service connections to households or street lighting.

The clamps can be used for anchoring 2 or 4 service cables.

Materials:

- Clamp plates : Hot dip galvanized clamp plates
- Wedges : UV and weather resistant engineering plastic
- Bolt : Galvanized steel

Features & Benefits:

- Sustains the load of the cable size accommodated, ref. BSEN 50483.
- Takes a range of service cable sizes (16 - 25mm2) and has no losable parts, simplifying inventory management.
- Withstands extreme conditions leading to long life, safety, low maintenance and reduced lifetime cost.

Product Code	Conductor size (Hd626)	Conductor Dia (Hd626)	Optimum Operating Load	Pkg Qty
SAS1 2C 16-25	2C x 16-25mm^2	7.0-9.4 mm	5 KN	50
SAS2 2C 16-25	2C x 16-25mm^2	7.0-9.4 mm	5 KN	50
SAS3 4C 16-25	4C x 16-25mm^2	7.0-9.4 mm	5 KN	50

Note: More options for supporting hardware is available in section SH on page no. 33

Standard Use / Application

To terminate in to
transformer leads or
mains for industrial / residential supply.

To provide angle up to 90° to the line.

Application Angle:

Maximum line deviation angle of 45° for single and 90° for double anchoring:

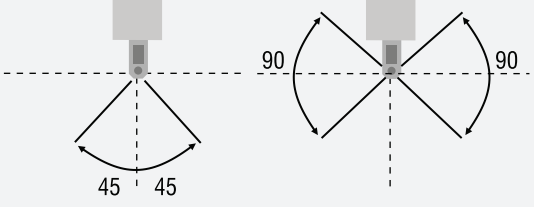

Anchoring Clamps (Customised NFC Design)

Axis Anchoring Clamps for Uninsulated Neutral Messenger System (ACI-B) are used along with a bracket or other supporting hardware (as a customized option), and are used to strain the uninsulated neutral messenger and also to provide angles of a LV-ABC system without damaging the neutral messenger.

The clamp and bracket are available separately or factory-assembled.

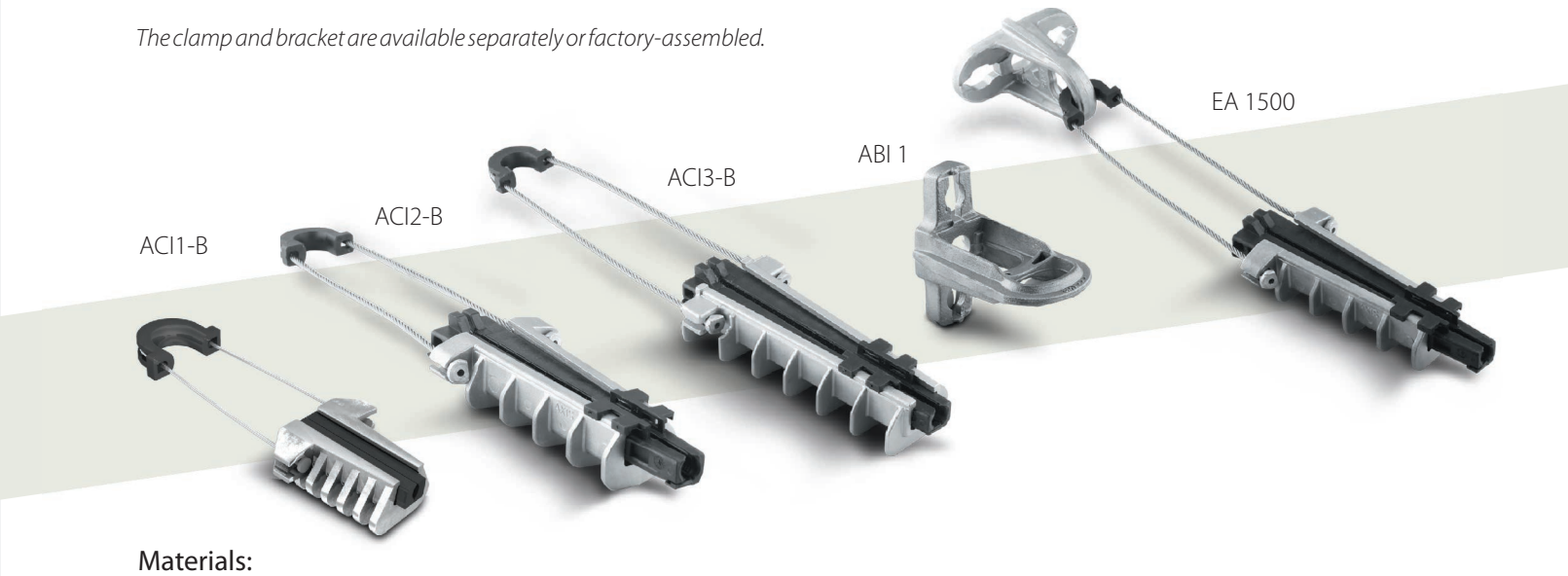

Materials:

- Body : High strength cast aluminum alloy.
- Wedges : UV and weather resistant engineering-plastic.
- Bail : Corrosion resistant flexible stainless steel wire.

Features & Benefits:

- Exceeds requirements of NF C 33-041 and also used in REC projects in India.
- Engineering plastics provide additional insulation, strength and enable live line working without additional tools.
- Grit applied along the cable gripping surface allows for gripping bare cables.
- Two clamps with a bracket used for large angle assembly which allows for easy turning in congested areas.
- Captive Design Clamp with a bracket used for straining, reduces installation time and cost.
- Withstands extreme conditions leading to long life, safety, low maintenance and reduced lifetime cost.

Product Code	Product Range	Conductor Dia (ref.)	Breaking Load (KN)	Pkg Qty
ACI1 2535 -B	25-35mm²	8.6 - 10.9 mm	5	60
ACI2 2535 -B	25-35mm²	8.6 - 10.9 mm	15	60
ACI2 1500 -B*	54.6-70mm²	12.3 – 13.6 mm	15	60
ACI3 5095 -B	54.6-70(95) mm²	12.3 – 13.6 (15.0) mm	20	30

Bracket Features:

- Heat treated high strength corrosion resistant aluminum alloy.
- Mounting by M14 or M16 bolts or by using 20x0.7mm SS Straps.

Product Code	Swivel Angle	Breaking Load	Pkg Qty
ABI1 1500	"45° for single anchoring 90° for double anchoring"	15 kN	60

** Standard product in accordance with NFC 33-041 can be ordered as EA 1500 = ACI2 1500 - B + ABI1 1500*
Note: Bolts, Straps and Ties to be ordered separately

Standard Use / Application

To terminate into transformer leads
or mains for industrial / residential supply.

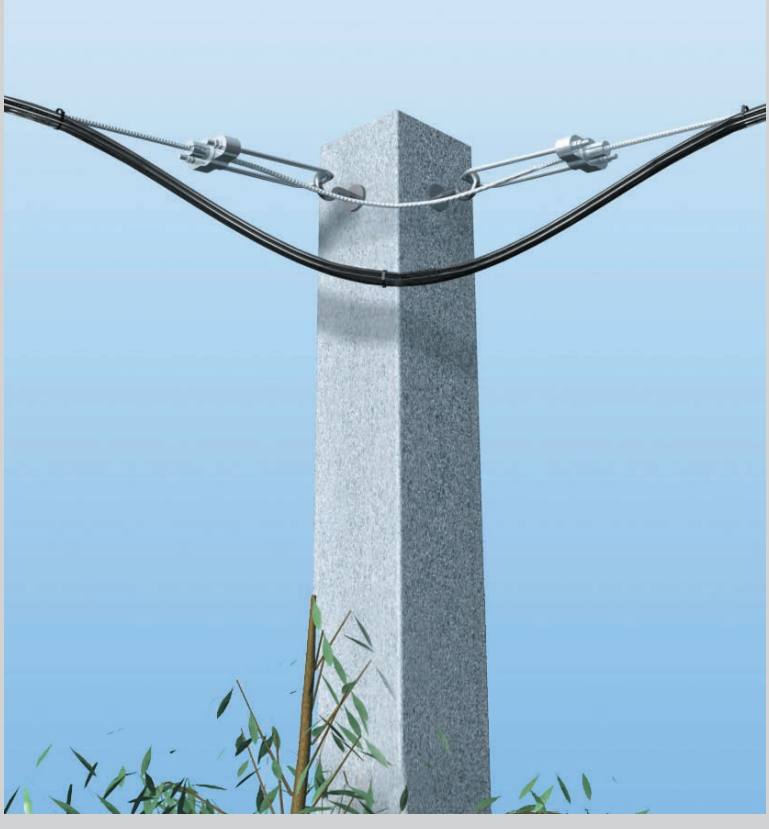

To provide angle up to 90 deg to the line.

Tension Clamps (REC Design)

Axis Tension Clamps for Uninsulated Neutral Messenger System (ACB) are used to hold the uninsulated neutral messenger. Made to be country, region and customer specific, this product is available in a bolted and wedge type.
This product is used along with

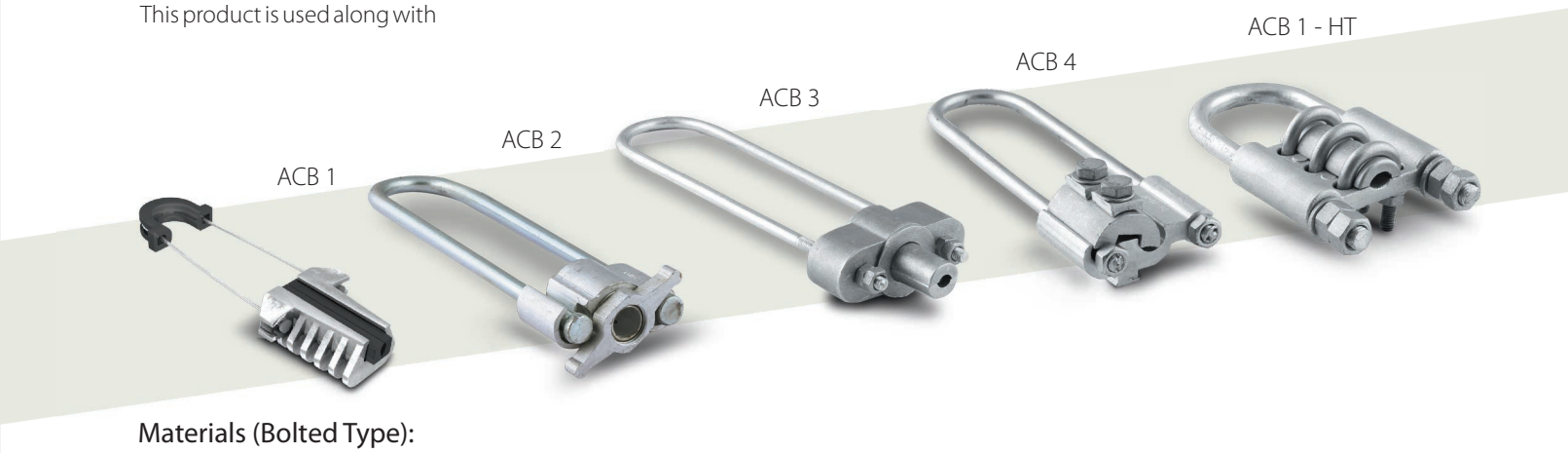

Materials (Bolted Type):

- Body : High strength Aluminum alloy
- U Bend & Bolts: Galvanized steel

Features & Benefits:

- Takes a range of messenger cable sizes, simplifying inventory management.
- Sustains the load of the cable size accommodated, ref. REC and customer specific requirements.
- Withstands extreme conditions leading to long life.

Product Code	Product Range	Conductor Dia (ref HD626 S1)	Load (kn)	Pkg Qty
ACB1 2535	25-35 mm²	5.8 – 7.3 mm	5 kN	60
ACB2 25	25 mm²	5.8 – 6.3 mm	6.9 kN	80
ACB2 35	35 mm²	6.8 – 7.3 mm	9.3 kN	80
ACB2 50	50 mm²	7.9 – 8.4 mm	13.2 kN	80
ACB2 70	70 mm²	9.7 – 10.2 mm	18.6 kN	80
ACB3 2535	25-35 mm²	5.8 – 7.3 mm	20 kN	80
ACB4 1695	16-95 mm²	4.6 – 12.0 mm	20 kN	80

High Tension Clamps

Axis High Tension Clamps for Uninsulated Neutral Messenger System (ACB - HT) are used to anchor the uninsulated neutral messenger of cross sections 50-150 mm2. Made to be country, region and customer specific, this product is available in a bolted type. This product is used along with various hooks.

Materials (Bolted Type):

- Body : Body : High strength Aluminum alloy
- U Bolts & Nuts : Galvanized steel

Features & Benefits:

- No losable parts & corrosion resistant
- Product is designed to take a range of messenger cable sizes and can take the load of the cable size accommodated.

Product Code	Product Range	Conductor Dia (ref HD626 S1)	Maximum Operating Load	Pkg Qty
ACB1-HT 1695	16-95 mm²	4.6 – 12.0 mm	15 kN	40

Standard Use / Application

To support and suspend the line

To provide service connection by tapping main line.

Application Angle:

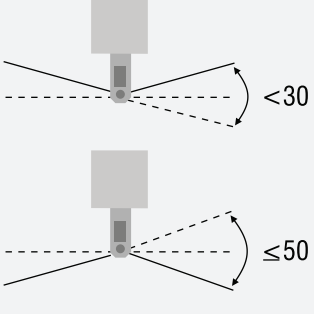

Suspension Clamps (Customised NFC Design)

Axis Suspension Clamps for Uninsulated Neutral Messenger System (SCI-B) are used along with a bracket or other supporting hardware to suspend and grip, without damaging, the neutral messenger of a LV-ABC system by means of an adjustable lock that accommodates a range of cable sizes.

The clamp and bracket are available factory-assembled or separetely.

Materials:

- Body, Movable Link & Keeper : UV and weather resistant, high strength engineering-plastic.

Features & Benefits:

- Exceeds requirements of NF C 33-040 and other international standards.
- The Engineering plastics used provide additional insulation, strength and enable live line working without additional tools.
- Grit applied along the cable gripping surface allows for gripping bare cables.
- The design facilitates longitudinal and transversal movements allowing easy turning in congested areas.
- Withstands extreme conditions leading to long life, safety, low maintenance and reduced lifetime cost.

Product Code	Product Range	Conductor Dia (ref.)	Breaking Load (KN)	Pkg Qty
SCI1 2535 -B	25-35mm^2	8.6 - 10.9 mm	5	90
SCI2 2535 -B	25-35mm^2	8.6 - 10.9 mm	12	30
SCI2 1500 -B	54.6-70mm^2	12.3 – 13.6 mm	12	30
SCI3 7095 -B	up to 95mm^2	12.3 – 13.6 (15.0) mm	12	30
SCI4 2595 -B	25-95mm^2	8.6 - 15.0 mm	12	40

Bracket Features:

- Heat treated high strength corrosion resistant aluminum alloy.
- Mounting by M14 or M16 bolts or by using 20x0.7mm SS Straps.
- The integrated metal stopper prevents the suspension clamp from turning over.

Product Code	Swivel Angle	Breaking Load	Pkg Qty
SBI1 1500	45°	13.1 KN	60

** Standard product in accordance with NFC 33-040 can be ordered as ES 1500 = SCI2 1500-B + SBI1 1500*

Note: Bolts, Straps and Ties to be ordered separately

Standard Use / Application

To support and suspend the line

Suspension Clamps

Axis Suspension Clamps(SCB) for uninsulated cables are used to suspend and grip the uninsulated neutral messenger. Made to be country and region specific, this product is available in a bolted and adjustable lock type and customized to customer requirements.

This product is used along with various hooks.

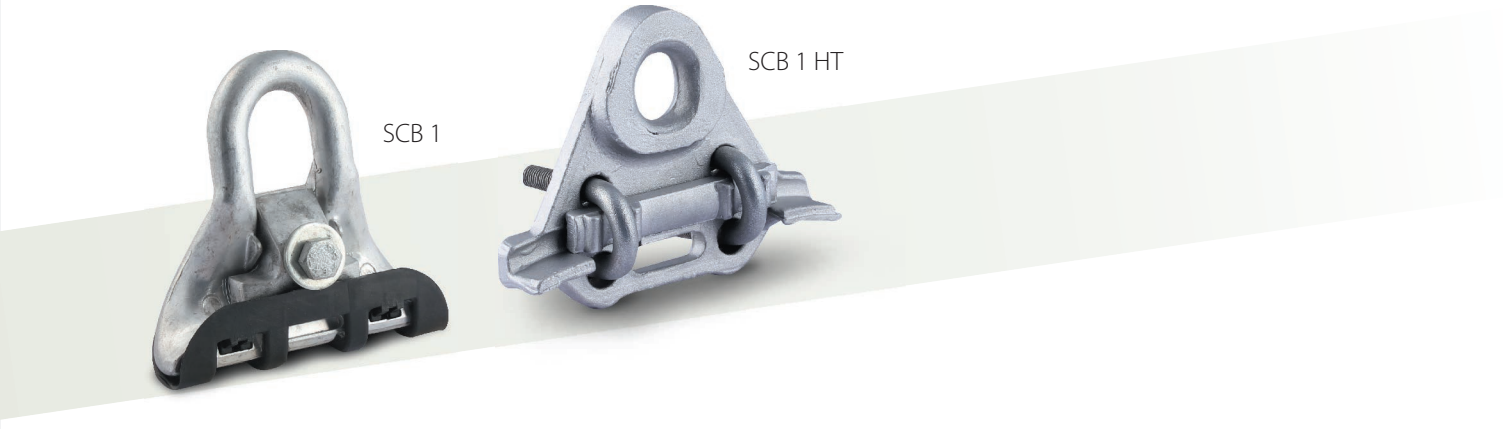

Materials (Bolted Type):

- Body : High strength Aluminum alloy
- Bolts : Galvanized steel
- Insulating Cover : UV and weather resistant engineering plastic

Features & Benefits:

- Product is designed to take a range of messenger cable sizes and can take the load of the cable size accommodated (BSEN 50483, REC and customer specific requirements).
- No losable parts
- Corrosion resistant

Product Code	Product Range	Conductor Dia (ref HD626 S1)	Load(kn)	Pkg Qty
SCB1 1695	16-95 mm²	4.6 – 12.0 mm	15 kN	80

High Tension Suspension Clamps

Axis Suspensions Clamps (SCB-HT) for Bare Messenger System - HT Line are used to suspend and grip the uninsulated neutral messenger of cross sections 50-150 mm². Made to be country and region specific, this product is available in a bolted type and customized to customer requirements.

This product is used along with various hooks.

Features:

- Materials (Bolted Type):
  - Body : High strength Aluminum alloy
  - U Bolts and nuts : Galvanized steel
- Corrosion resistant
- Product is designed to take a range of messenger cable sizes and can take the load of the cable size accommodated (BSEN 50483 and customer specific requirements).

Product Code	Product Range	Conductor Dia (ref HD626 S1)	Load(KN)	Pkg Qty
SCB1-HT 50150	50 - 150 mm²	7.9 – 15.0 mm	15 kN	40

Insulation Piercing Connectors (IPC)

Insulation Piercing Connectors are used on all AB cable systems (messenger wire as well as self supporting system) to take a tap connection.

This tap can be used to continue the line, distribute the line, used in street lighting or in service connections to households.

The design allows the connection to be completely sealed against any water ingress, thus acting as a waterproof connector.

Application Guide

IPCs can be selected according to their application.

There are four main applications to IPCs, namely street light, tap off, distribution box charging and jumper connections.

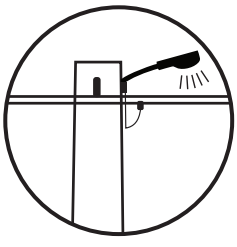

1. Street Light Connections

In this application, IPCs are generally used to tap the main AB Cable and connecting it to a service line that powers streetlights or other applications.

ABC94005

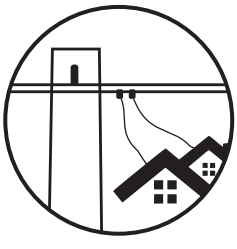

2. Tap off/Multi Tap Connection to Households

These IPCs are used to tap the main AB Cable and bring power to households. Using the Muliport IPC, one tap connection from the main line can be used to bring connections to multiple households.

ABC94014

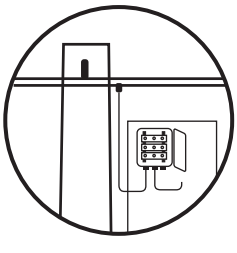

3. Distribution Box Charging Connection

These IPCs are used to tap the main AB Cable Line to charge Low Voltage Distribution Boxes which are further connected to different applications such residential connections, street lights, etc. Axis Low Voltage Distribution Boxes can provide up to 9 outgoing connections for each incoming line.

ABC94008 ABC94009 ABC94011

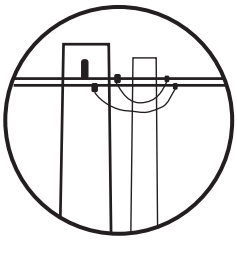

4. Jumper Connection

These IPCs are generally used with the same size of cable on each side to facilitate T-Connections (90° turns) or any other high angle turn.

ABC94008 ABC94011 ABC94013

Product Code	Application	Cable Range		Torque	Bolts	
		Main Line	Tap Line		No	Spanner Size (mm)
ABC94005	Street light & Service connection	16-95mm²	1.5-10mm²	5 - 7 Nm	1 x M6	10
ABC94008	AB Cable to AB Cable Jumper / DB Charging	50-150 mm²	50-150 mm²	18-20 Nm	1 x M8	13
ABC94009	AB Cable to AB Cable Tap / DB Charging	16-95(120)mm²	4(16)-50 mm²	9 – 11 Nm	1 x M8	13
ABC94010	AB Cable to AB Cable Tap	16-95mm²	6-35(2.5)mm²	9 – 11 Nm	1 x M8	13
ABC94011	AB Cable to AB Cable Jumper / DB Charging	16-95mm²	16-95mm²	15 Nm	1 x M8	13
ABC94012	AB Cable to AB Cable Jumper	25-120 mm²	16-120 mm²	14 Nm	2 x M8	13
ABC94013	AB Cable to AB Cable Jumper	95-240 mm²	95-240 mm²	25 Nm	2 x M10	17
ABC94014	AB Cable to AB Cable Multi Tap	50-150 mm²	1.5-35 mm²	18-20 Nm	1 x M8	13

Standard Use / Application

Service T-off

Street light connection

Insulation Piercing Connectors IPC

Insulation Piercing Connectors are used on all AB cable systems (messenger wire & supporting system) to take a tap connection. This tap can be used to continue the line, distribute the line, used in street lighting or in service connections to households. The design allows the connection to be completely sealed against any water ingress, thus acting as a waterproof connector.

Materials:

- Body: Black High strength engineering-plastic used for mechanical reliability of the connector.
- Contact Plates: Tinned Copper or Tinned Copper Alloy or Aluminium or Aluminium Alloy.
- Fasteners: Galvanised Steel.
- Shear Nut: Aluminium or Aluminium Zinc Alloy

Features & Benefits:

- Complies to National and International Testing Standards (NF C, BSEN, etc.).
- Tap connection can be taken from either side and grease filled end cap provided for safe termination.
- Easy and safe installation on live lines thus leading to less downtime during maintenance and installation.
- Connections are made without stripping the cable ensuring long cable life and preventing loss due to theft.
- Weather resistant and Waterproof (passes 6 KV underwater test) thus reducing distribution losses & faults.
- Contact plates allows bimetallic use and are suitable for Aluminum to Aluminum and Aluminum to Copper connections.
- Accommodation of a range of cable sizes and no losable parts leading to simple inventory management.
- Simultaneous tightening with shear nut design which prevents loose connections or overtightning.

Product Code	Design Capacity of Cable Size		Torque	Bolts	
	Main Line	Tap Line		No	Spanner Size (mm)
ABC94005	16-95mm²	1.5-10mm²	5 - 7 Nm	1 x M6	10
ABC94010	6-95mm²	6-35(2.5)mm²	9 - 11 Nm	1 x M8	13
ABC94009	16-95(120)mm²	4(16)-50 mm²	9 - 11 Nm	1 x M8	13
ABC94011	16-95mm²	16-95mm²	15 Nm	1 x M8	13
ABC94008	50-150 mm²	50-150 mm²	18 - 20 Nm	1 x M8	13
ABC94012	25-120 mm²	16-120 mm²	14 Nm	2 x M8	13
ABC94013	95-240 mm²	95-240 mm²	25 Nm	2 x M10	17
ABC94014	50-150 mm²	1.5-35 mm²	18 - 20 Nm	1 x M8	13

Pre-Insulated Midspan Joints

Axis pre-insulated midspan joints (MSJ) are used for insulated AB cables phase or neutral to join two cables. The end of the cables need to be stripped as per the length defined for the connector and crimping is to be done on the locations designated on the insulation of the connector.

Materials:

- Aluminum barrel factory filled with oxide inhibiting compound.
- Insulation Material: UV and weather resistant engineering plastic
- Seal Ring: UV Resistant Elastomer. Colour identification for each size.

Features & Benefits:

- Complies to National and International Testing Standards (NF C, BSEN, etc.).
- Weather resistant design thus reducing distribution losses and faults.
- Easy crimping with standard hexagonal dies.

Item Code	Cable Size mm^2	Colour Code	Cable Dia
MSJ0010	10	GREEN	4.5 mm
MSJ0016	16	BLUE	5.5 mm
MSJ0025	25	ORANGE	6.5 mm
MSJ0035	35	RED	8.0 mm
MSJ0050	50	YELLOW	9.7 mm
MSJ0070	70	WHITE	11.0 mm
MSJ0095	95	GREY	12.5 mm
MSJ0120	120	PINK	14.0 mm
MSJ0150	150	VIOLET	15.5 mm
MSJN0050	54.6 N	BLACK	9.6 mm
MSJN0070	70 N	WHITE	11.0 mm

Pre-insulated Bimetallic Lugs

Axis pre-insulated Bimetallic lugs (BMI) are used for insulated AB cables phase or neutral to terminate the cables.
The end of the cables need to be stripped as per the length defined for the lugs and crimping is to be done on the locations designated on the insulation of the lug.

Materials:

- Aluminum barrel factory filled with oxide inhibiting compound.
- Insulation Material: UV and weather resistant engineering plastic
- Seal Ring: UV Resistant Elastomer. Colour identification for each size.

Features & Benefits:

- Complies to National and International Testing Standards (NF C, BSEN, etc.).
- Weather resistant design thus reducing distribution losses and faults.
- Easy crimping with standard hexagonal dies.

Product Code	Cable Size mm^2	Colour Code	Cable Dia
BMI0010	10	GREEN	4.5 mm
BMI0016	16	BLUE	5.5 mm
BMI0025	25	ORANGE	6.5 mm
BMI0035	35	RED	8.0 mm
BMI0050	50	YELLOW	9.7 mm
BMI0070	70	WHITE	11.0 mm
BMI0095	95	GREY	12.5 mm
BMI0120	120	PINK	14.0 mm
BMI0150	150	VIOLET	15.5 mm

AXIS™
An ISO 9001: 2015 Company

What material should you use for Low Voltage Electrical Distribution Boxes?

What is an Electrical Distribution Box?

A distribution box is a key component of an electrical supply system. From a single, common enclosure, it helps to divide an electrical power main feed into multiple subsidiary outgoing connections that can be used to provide electrical connections to individual homes, buildings or for other requirements.

Material Options for Electrical Distribution Boxes

The three most popular materials used for Electrical Distribution Boxes are Thermoset Plastics such as Sheet Molding Compounds (SMC), Engineering Thermoplastics such as Polycarbonate (PC) and Acrylonitrile Styrene Acrylate (ASA) and Epoxy Coated Steel used to make Metallic Deep Drawn Boxes.

We compare the properties of these three groups in the table below:

Material	SMC	PC and ASA	Epoxy Coated Steel
Manufacturing Process	This group of plastic are a set of polymeric material that undergoes **irreversible chemical changes** when it is cured. Curing can be done using heat, catalysts or ultraviolet light. Once the material has been cured, it cannot be altered.	This group of plastic becomes soft and malleable when heated & rigid when cooled. This process may be **repeated a number of times** without chemically altering the material.	Metallic sheet drawn to form a shape of enclosure with mechanical means.
Recyclability	Non- Recyclable	Recyclable	Recyclable
Density	Density = 1.85 g/cm^3	Density = 1.2 g/cm^3	Variable Weight, overall weight can be less than an SMC box due to metallic strength.
Electrical Conductivity	Electrically Non-Conductive	Electrically Non-Conductive	Electrically Conductive, Epoxy coated to make Non-Conductive
Impact Strength	Brittle	High Impact strength	High Impact strength

Conclusion

The non-recyclability of SMC as opposed to the other materials means that it has a bigger environmental impact and it also leads to higher production costs because rejected items cannot be recycled and reused.

Taking the material properties into account and relating them to the performance critirea for Low Voltage Electrical Distribution Boxes along with product cost, it becomes clear that Engineering Thermoplastics such as Polycarbonate (PC) and Acrylonitrile Styrene Acrylate (ASA) are the best materials for the application. Metallic Deep Drawn Boxes made from Epoxy Coated Steel are also a good option for these Distribution Boxes.

Axis provides a wide range of Electrical Distribution Boxes in PC, SMC and Deep Drawn that can be used in various low voltage applications.

An ISO 9001: 2015 Company

Distribution Boxes (PC)

This range of Distribution Boxes are manufactured from Polycarbonates (PC) or ASA. These boxes have an option for spring loaded connections or busbar connections and are used to take multiple connections from a single enclosure - these connections can be used for distribution to households.

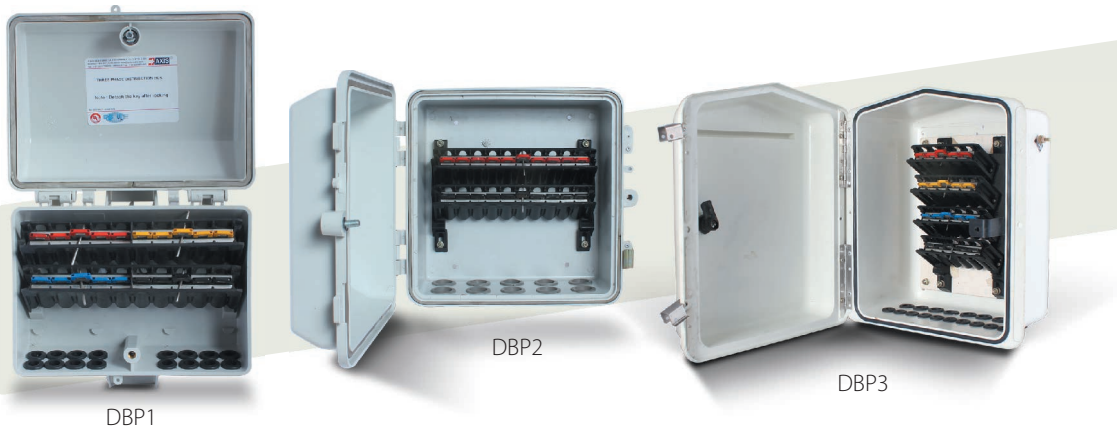

DBP1 DBP2 DBP3

Materials:

- Body : UV resistant, fire retardant engineering thermo plastic (PC or ASA).
- Spring Loaded Option: Copper Busbar. Aluminium Busbar as per customer requirement.
- Cassette: UV Resistant engineering thermoplastic.
- Busbar Option: Copper Busbar. Aluminium Busbar as per customer requirement.

Features & Benefits:

- Passes the glow wire test of 960° Celsius as per IEC and thus protects the entire line from fire.
- IP 55 rated and passes Heat Deflection Test thus reducing Distribution losses and faults.
- Resistance to electric shock protecting human lives.
- Universal brackets allow mounting of boxes on any pole type.
- Specially designed key to lock/open the boxes preventing losses due to electrical theft.
- Spring loaded type design allows easy and quick mounting of cables.
- Due to it's recyclability, these boxes have a lower impact on the environment.
- These boxes eliminate the use of multiple piercing connectors on a main cable simplifying Inventory Management.
- Customized boxes are available on request.

Enclosure		Connection Type	E-code, Spring Loaded (Incoming / Outgoing)			
Type	Size		1/4	1/5	1/6	1/9
DBP1	180x250x134 mm	1 Phase	DBP1SLS4	-	-	DBP1SLS9
		3 Phase	DBP1SLT4	-	-	-
DBP2	270x270x160 mm	1 Phase	DBP2SLS4	DBP2SLS5	DBP2SLS6	DBP2SLS9
		3 Phase	DBP2SLT4	DBP2SLT5	DBP2SLT6	DBP2SLT9
DBP3	275x350x210 mm	1 Phase	DBP3SLS4	DBP3SLS5	DBP3SLS6	DBP3SLS9
		3 Phase	DBP3SLT4	DBP3SLT5	DBP3SLT6	DBP3SLT9

*Note: **CU** or **AL** to be mentioned after E-code for Copper Busbar type and Aluminum Busbar type respectively.*

'Busbar Type (Customised)		
DBP1, DBP2, DBP3	1 Phase	140 Amps CU/Al Busbar with multiple outgoing connections.
	3 Phase	200 Amps CU/Al Busbar with multiple outgoing connections.

An ISO 9001: 2015 Company

Distribution Boxes (SMC)

This range of Distribution Boxes are manufactured from Sheet Molding Compounds (SMC). These boxes have an option for spring loaded connections or busbar connections and are used to take multiple connections from a single enclosure - these connections can be used for distribution to households.

DBS1

DBS3/DBS4

Materials:

- Body : UV resistant, fire retardant engineering thermoset plastic (SMC).
- Spring Loaded Option: Copper Busbar. Aluminium Busbar as per customer requirement.
- Cassette: UV Resistant engineering thermoplastic.
- Busbar Option: Copper Busbar. Aluminium Busbar as per customer requirement.

Features & Benefits:

- Passes the glow wire test of 960° Celsius as per IEC and thus protects the entire line from fire.
- IP 55 rated and passes Heat Deflection Test thus reducing Distribution losses and faults.
- Resistance to electric shock protecting human lives.
- Specially designed key to lock/open the boxes preventing losses due to electrical theft.
- Universal brackets allow mounting of boxes on any pole type.
- Spring loaded type design allows easy and quick mounting of cables.
- These boxes eliminate the use of multiple piercing connectors on a main cable line simplifying Inventory Management.
- Customized boxes are available on request.

Enclosure		Connection Type	E-code, Spring Loaded (Incoming / Outgoing)			
Type	Size		1/4	1/5	1/6	1/9
DBS1	180x250x134	1 Phase	DBS1SLS4	DBS1SLS5	DBS1SLS6	DBS1SLS9
		3 Phase	DBS1SLT4	-	-	-
DBS2	200x300x100	1 Phase	DBS2SLS4	DBS2SLS5	DBS2SLS6	DBS2SLS9
		3 Phase	DBS2SLT4	-	-	-
DBSS3	275x350x210	1 Phase	DBS3SLS4	DBS3SLS5	DBS3SLS6	DBS3SLS9
		3 Phase	DBS3SLT4	DBS3SLT5	DBS3SLT6	DBS3SLT9
DBS4	300x400x200	1 Phase	DBS4SLS4	DBS4SLS5	DBS4SLS6	DBS4SLS9
		3 Phase	DBS4SLT4	DBS4SLT5	DBS4SLT6	DBS4SLT9

*Note: **CU** or **AL** to be mentioned after E-code for Copper Busbar type and Aluminum Busbar type respectively.*

'Busbar Type (Customised)		
DBS1, DBS2, DBS3, DBS4	1 Phase	140 Amps CU/Al Busbar with multiple outgoing connections.
	3 Phase	200 Amps CU/Al Busbar with multiple outgoing connections.

An ISO 9001: 2015 Company

Distribution Boxes (Deep Drawn)

This range of Distribution Boxes are manufactured from Epoxy Coated Steel. These boxes have an option for busbar or terminal block connections and are used to take multiple connections from a single enclosure - these connections can be used for distribution to households.

DBD1

DBD2

Materials:

- Body : Epoxy Coated Deep Drawn Steel
- Busbar Option: Copper Busbar. Aluminium Busbar as per customer requirement.
- Terminal Block Option: Housing: Engineering Thermoplastic
- Aluminium Busbar.

Features & Benefits:

- Resistance to electric shock protecting human lives.
- Provision for tamper proof locks to prevent electrical theft.
- IP 55 rated and passes Heat Deflection Test thus reducing Distribution losses and faults.
- Universal brackets allow mounting of boxes on any pole type.
- These boxes eliminate the use of multiple piercing connectors on a main cable simplifying Inventory Management.
- Customized boxes are available on request.

Enclosure		Connection Type	E-code, Spring Loaded (Incoming / Outgoing)	
Type	Size		1/4	1/8
DBD1	225x290x120	1 Phase	DBD1TBS4	DBD1TBS8
		3 Phase	DBD1TBT4	-
DBD2	300x418x120	1 Phase	-	DBD2TBS8
		3 Phase	DBD2TBT4	DBD2TBS8

Busbar Type (Customised)		
DBS1, DBS2	1 Phase	140 Amps CU/Al Busbar with multiple outgoing connections.
	3 Phase	200 Amps CU/Al Busbar with multiple outgoing connections.

AXIS™
An ISO 9001: 2015 Company

Supporting Hardware

Note : All sizes are available on request

ABI1

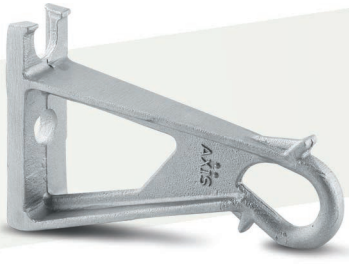

SBI 1

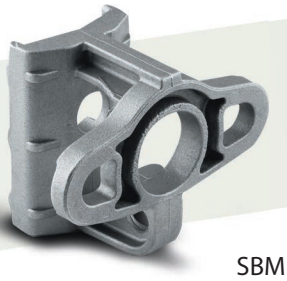

SBM 1

SH 1

SH 2

SH 3

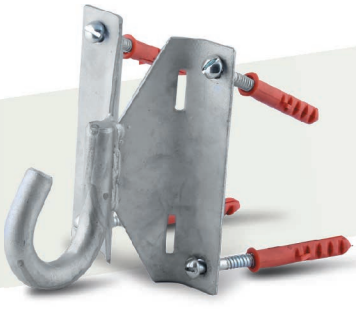

SH 4

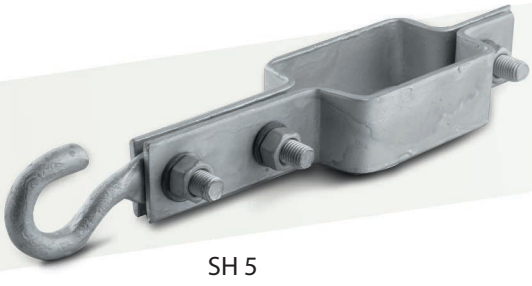

SH 5

AXIS™
An ISO 9001: 2015 Company

Other Hardware & Tools

Elastomeric End Caps

These end caps are used to terminate the ends of AB cable and are usually supplied with the piercing connectors but can also be supplied separately.

Features:

- Sustains 6KV underwater test.
- UV Resistant Elastomer
- One end cap is used to accommodate a range of cable sizes.

Heat Shrinkable End Caps

These end caps are used to terminate the ends of AB cable and are heat shrinkable to seal and protect the ends of the LV AB cable.

Features:

- UV and weather Resistant.
- Heat shrinkable using a hot air gun.
- Various sizes are available.

Fixing Nails for AB Cable

Fixing nails are used to support Aerial bundled cable on the Facades. Due to its adjustable design it can accommodate wide range of Aerial bundle cables.

It is made of Plastic moulded aluminium strip, plastic nozzle, plastic wall plug and high strength mild steel screw with anti-corrosive surface treatment.

Cable ties

Cable Ties are used along with the Fixing Nails to accommodate an additional bundle if required.

Features:

- UV and weather Resistant.
- Heat shrinkable using a hot air gun.
- Various sizes are available.

Tensioner

This tool is used to tension the steel straps which are mounted on the poles to hold the bracket in place.

AXIS™
An ISO 9001: 2015 Company

Other Hardware & Tools

SS Strap & Buckle

These are used to mount brackets onto the poles. They are usually supplied in a coiled length of 50 meters.

Materials:

- Anti Corrosive Stainless Steel

Features & Benefits:

- Strap Dimensions 20 x 0.7mm
- Strap supplied with easy to handle dispenser

Ratchet Spanner

Features & Benefits:

- Ease of installation of bolts, nuts and shear heads used in clamps and connectors.
- Ratchet reverse function allows tightening and loosening with a same tool.

Multi Function Phase Separator

Materials:

- UV resistant engineering thermoplastic

Features & Benefits:

- Multiple options for separating phases of ab cables which also allows live line working
- Inbuilt hex sizes allows same tool to be used as a spanner

Crimping Tools

Crimping tools are used on compression type connectors for joining or terminating cables.

Features & Benefits:

- Each tool is supplied with standard set of hexagonal or round crimping dies.
- One tool can be used with different set of die size to cover wide range of cables thus reducing inventory cost.

AXIS™
An ISO 9001: 2015 Company

Notes

Earthing & Lightning Protection System and Exo Thermic Welding

AXIS provides complete range of E & LP products & system in order to achieve total protection to the Structures, Equipment and community. These products are manufactured in accordance to International standards such as BS EN 50164,UL & IS

Electrical Connectors

Axis manufactures wide range of Lugs and Connectors sizes ranging from 1.5mm2 -1200mm2 of Copper, Aluminum & Bimetal. These products are Compression or Bolted type. Popular standards such as BSEN, IS & UL are followed to manufacture and to test these Connectors.

Cable Management System

AXIS Cable Glands and accessories are manufactured according to the functional requirements of IEC 62444 and DIN standards. AXIS Cable Cleats are manufactured in accordance with IEC 61914.

AXIS Cable Ties can be supplied with other accessories like Markers, I.D. Tags & Carriers used in oil refineries, petrochemical industries and other utilities worldwide. These cable ties comply to UL-1565 and BS EN 62275 standards.

CERTIFICATIONS

AN ISO 9001 : 2015 COMPANY

20000284 QM15

TÜVRheinland CERTIFIED

Underwriter Laboratories Inc. (UL)

Grounding and Bonding Equipment

UL-451 File No. E232605

Wire Connectors and Soldering Lugs

UL-467 File No. E236242

Power Grid Corporation of India Limited

NFC Standards

NATIONAL THERMAL POWER CORPORATION

NSIC - CRISIL SE 1A* Highest performance capability and high financial strength

AEO भारतीय सीमा शुल्क INDIAN CUSTOMS

STAR EXPORT HOUSE

Recognition by Goverment of India

AXIS™ TESTED PRODUCTS EFFICIENT SERVICE TRUSTED BRAND

An ISO 9001: 2015 Company

Poleline Hardware

AXIS offers complete range of OH line Hardware for LV, MV & HV Electrical distribution line systems. These products are manufactured taking into consideration international standards and Utility specific requirements.

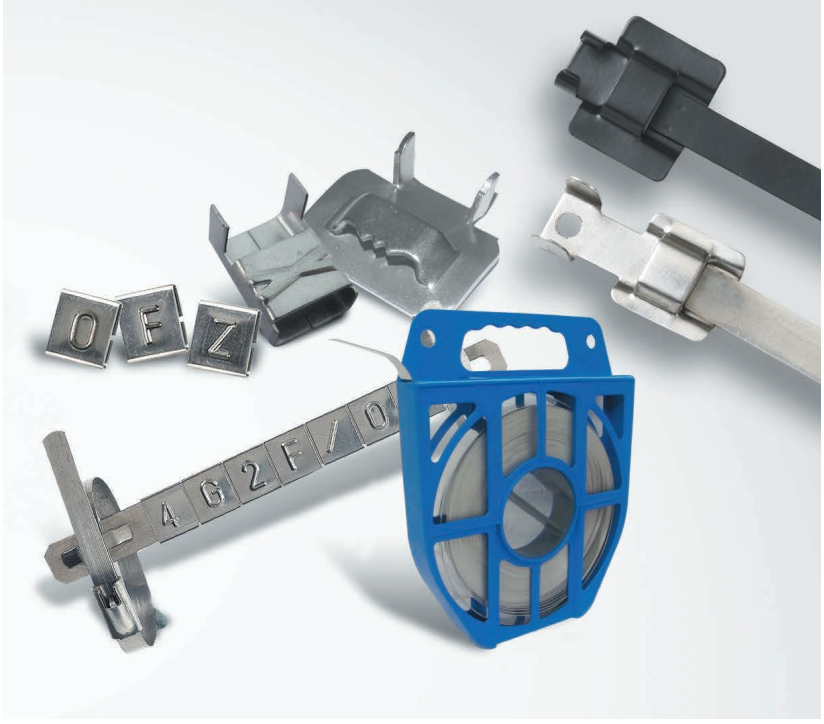

AXIS™

TESTED PRODUCTS
EFFICIENT SERVICE
TRUSTED BRAND

An ISO 9001: 2015 Company

2nd Edition

2020

AXIS CELEBRATES 25TH ANNIVERSARY

AXIS ELECTRICAL COMPONENTS (I) P. LTD.

Registered Office: AXIS House, Plot No. 104 C

Administrative Office: Plot No. 149 BCD

Kandivali Co-op Industrial Estate Ltd., Kandivali (W),
Mumbai – 400067, Maharashtra, India. Tel: +91-22-67756000
email: sales@axis-india.com | Website: www.axis-india.com